Hillmar
Hillmar Industries Ltd.
7371 Vantage Way
Delta, BC V4G 1C9
P:604 946-7115 F:604 946-0329
info@hillmar.com www.hillmar.com

RAIL CLAMP RPBM050
CBHV-LH-250-050-W08-RP
SPECIFICATION SHEET
SLS & MKTG
ENGLISH

Sheet Number:	
Job Number:	
Form Number:	229-105-78275PT

Company / Project Reference:	Date.:	Page.:	Document Package No.:	Rev.:
		1 OF 1		

Inventor Drawing

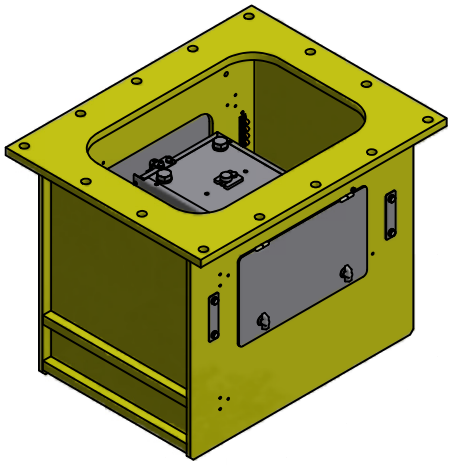

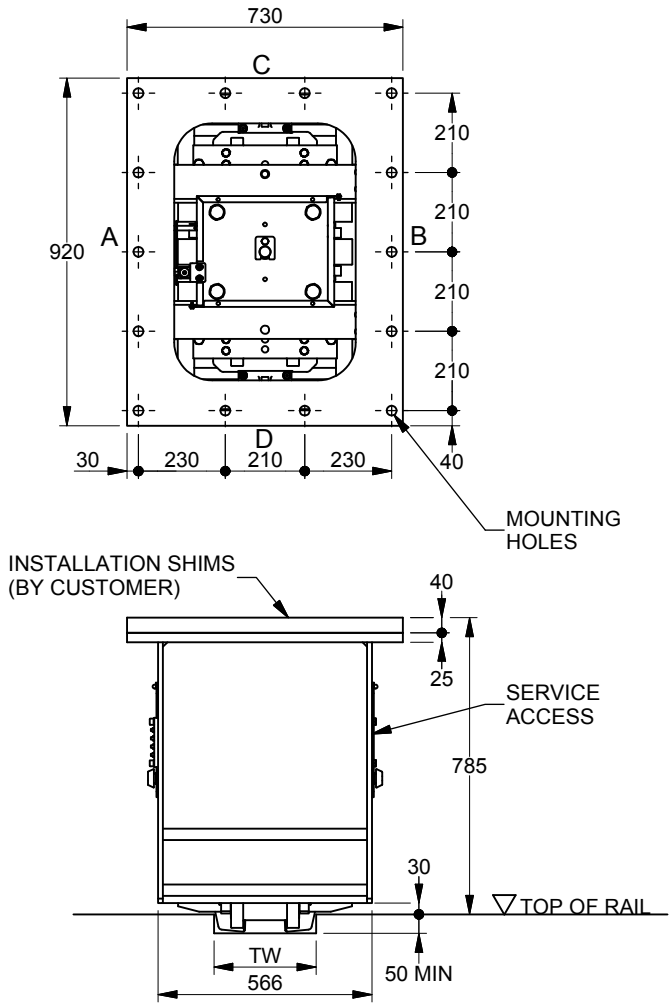

FEATURE	CODE
Rail Clamp type	CBHV-LH
Holding force	250
Coeficient of friction	050
Wedge	W08
No power unit	RP

Example for ordering	CBHV-LH-250-050-W08-RP

TECHNICAL DATA

Nominal holding force (kN)	250
Standard release pressure (MPa)	13
Maximum operating pressure (Mpa)	14.45
Cylinder volume (full stroke) (cm3)	323
Cylinder volume (working stroke) (cm3)	285
Mounting holes	14 x Ø26
Mounting bolts	14 x M 24 CL 10.9
Approximate weight (kg)	640
Mechanism - horizontal float (mm)	±25
Mechanism - vertical float (mm)	±25
Hydraulic connection	-6 37° JIC
Shipping crate (L x W x H) (mm)	1100 x 900 x 950

NOMINAL SPECIFICATION

Spring set - Hydraulically released device.

Control voltage electrical junction box connection to be drilled to suit requirements by customer.

RAIL WIDTH (mm)	MINIMUM TROUGH WIDTH TW (mm)
61 - 95	270
96 - 120	300
121 - 150	325

NOTES

All figures are nominal figures only.

All dimensions are in millimeters.

Document Template #710-101-62058

** ALL TECHNICAL DATA IS SUBJECT TO CHANGE WITHOUT NOTICE **
Hillmar works have a fully registered ISO 9001-2008 quality assurance programme (QCB #01-1525)

C:\TEMP\22e68076-0944-4bd8-adc9-24765753c888\8000052424\1\HILLMAR\HILLMAR PRODUCTION\02 STORM BRAKES\0700-2\07002001 CXHV-LH\SPC-SHT-CXHV-LH\07 CBHV-XX-XXX-050-RP\78275 CBHV-LH-250-050-W08-RP.idw